DRG.NO: GDP10998/01/03
SHEET 1 OF 1 SHEETS

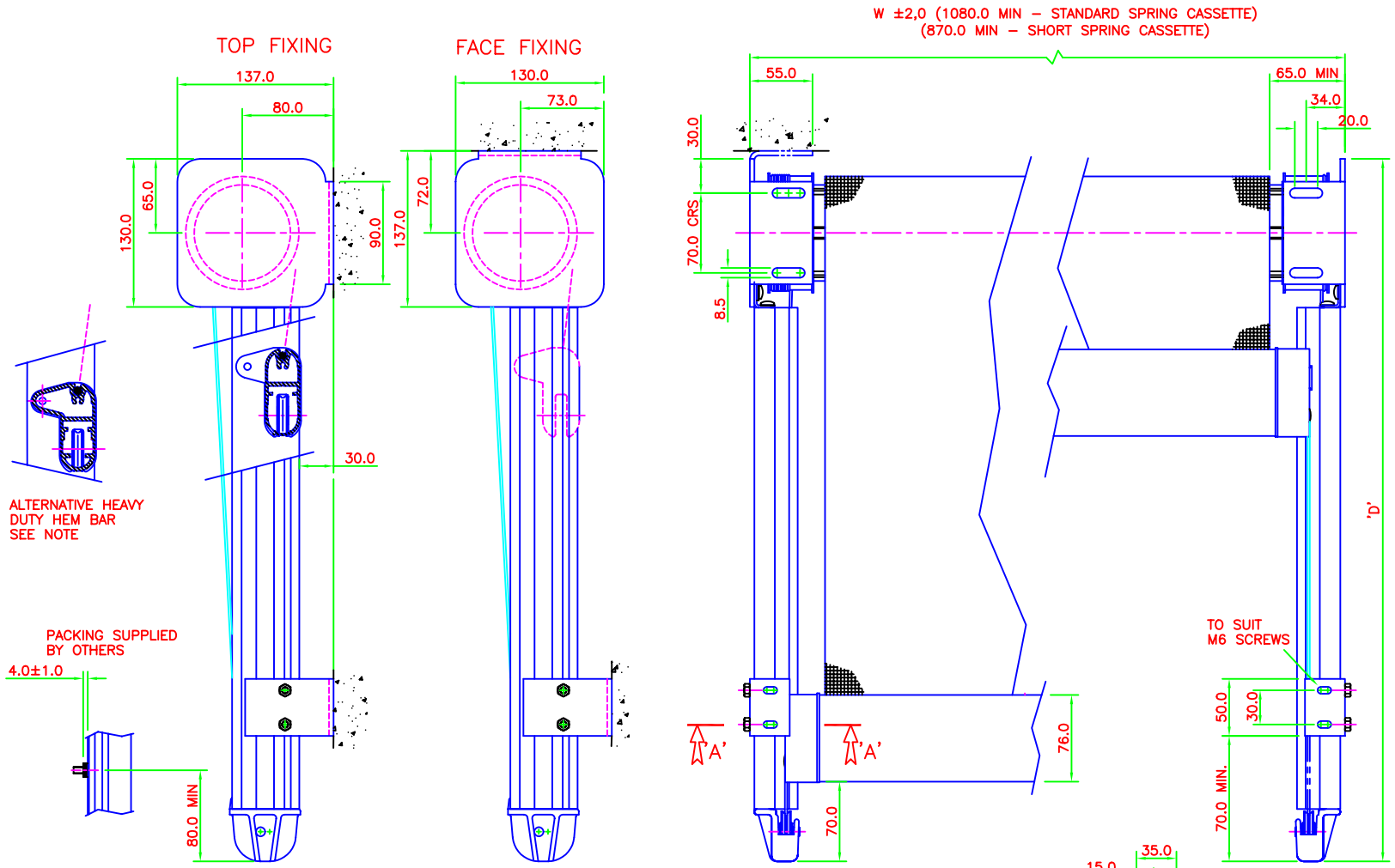

NOTE
WHEN W IS 4000,0 AND ABOVE HEAVY DUTY HEM BAR TO BE INSTALLED.

WHEN D IS 4000,0 AND OVER RELIEVING ROLLER AND BRACKET TO BE INSTALLED AS SHOWN ON GDP10999 AT MID DISTANCE.
IMPORTANT!
RELIEVING ROLLERS CANNOT BE USED WITH HEAVY DUTY HEM BAR OPTION.

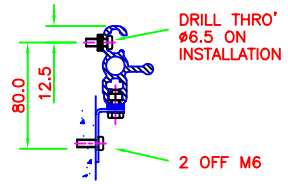

ALTERNATIVE SIDE FIXING

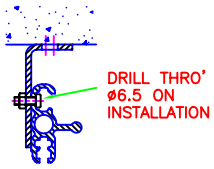

SECTION 'A–A'

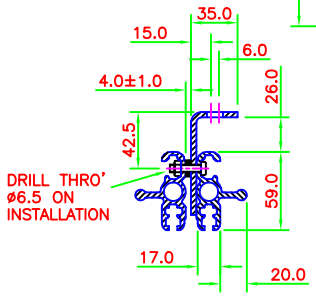

'BACK TO BACK' FIXING

REMOVE ALL SHARP EDGES	
IF IN DOUBT ASK	DO NOT SCALE
GENERAL TOLERANCES TO ISO2768–m	
ALL DIMNS.IN mm	DRAWN TO BS308

THIRD ANGLE PROJECTION

This drawing is copyright and the exclusive property of GUTHRIE DOUGLAS LTD. and must not be copied, used or exhibited without prior written consent.

Guthrie Douglas
12 Heathcote Way, Heathcote Ind. Est;
Warwick, CV34 6TE, England.
Tel:(01926)452452 Fax:(01926)336417

ISSUE	01	02	03
MOD NO.		0399	0521
DATE		04.04.96	27:04:98
APP'D	THC	THC	
DATE	25.05.95	04.04.96	

MATL:
–
–

PROTECTIVE TR'T:
–
–

REVISION	ASSEMBLY:
A	–
SCALE: 1:2	–
	–
USED ON: SOLAR	WEIGHT: –

TITLE:
INSTALLATION OF TESS 120
STD. INTERNAL GUIDED
SYSTEM

Drawn	Date	Checked	Date
JR	20.03.98	THC	23:03:98

DRG.NO:
GDP10998/01/03
SHEET 1 OF 1 SHEETS

FILE NAME: SOLAR/GDP10998 DATE CREATED: 20.03.98 ORIG. A1 SHEET SCALE: 1:1